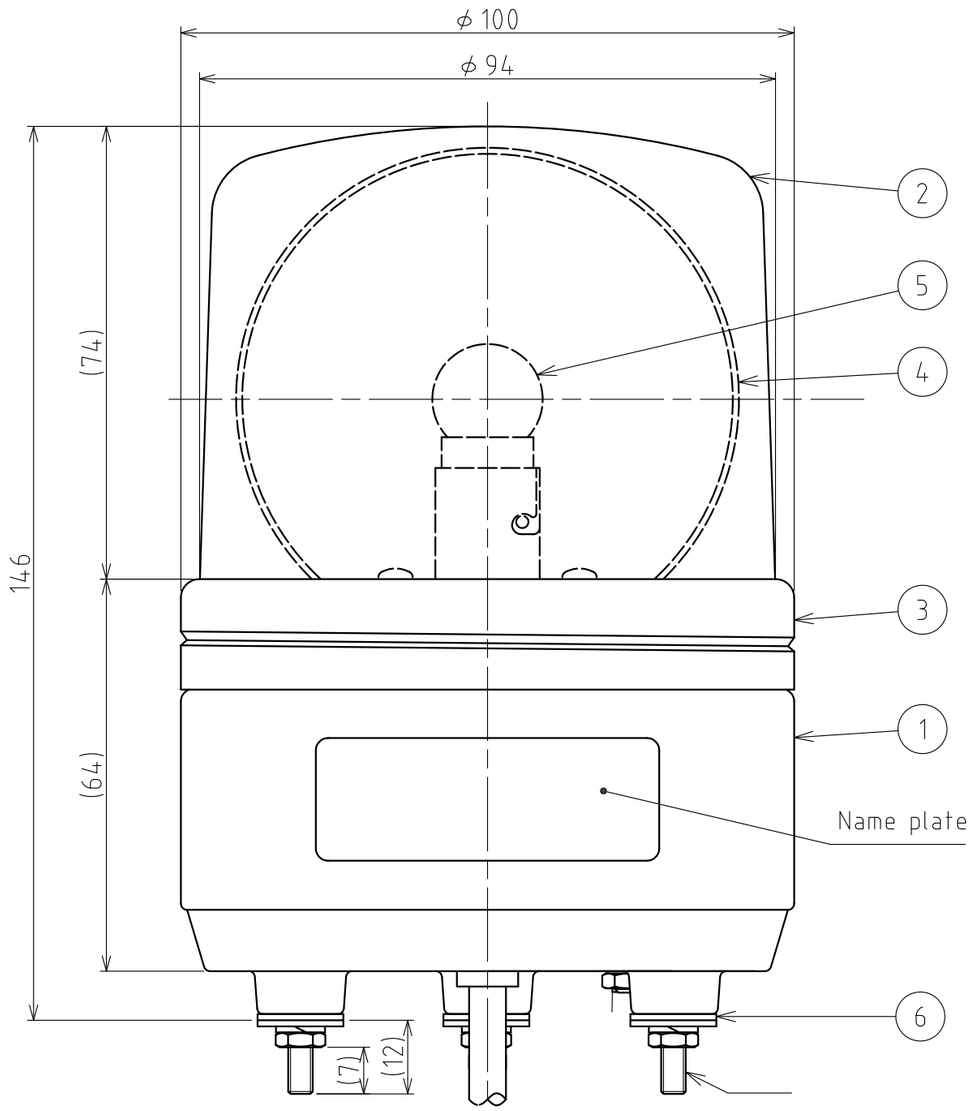
φ100
φ94
(74)
146
(64)
(7)
(12)
2
5
4
3
1
6
Name plate

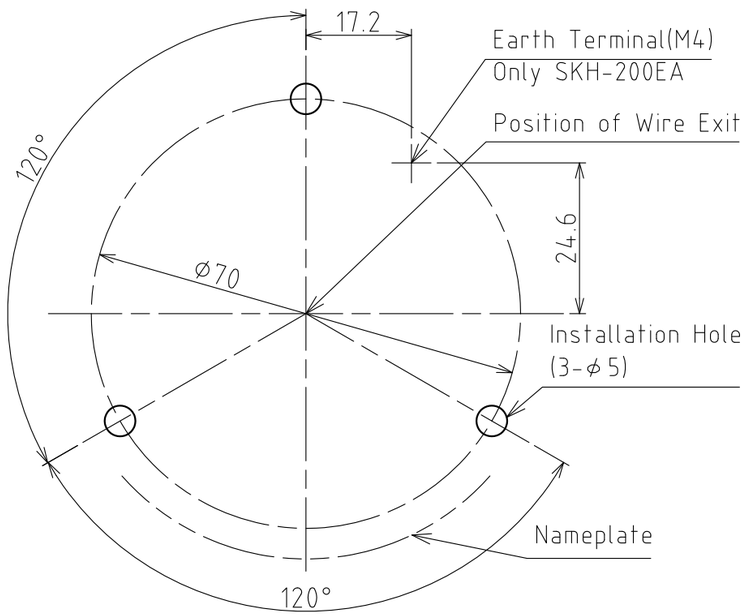
17.2
Earth Terminal(M4)
Only SKH-200EA
Position of Wire Exit
120°
24.6
φ70
Installation Hole
(3-φ5)
Nameplate
120°